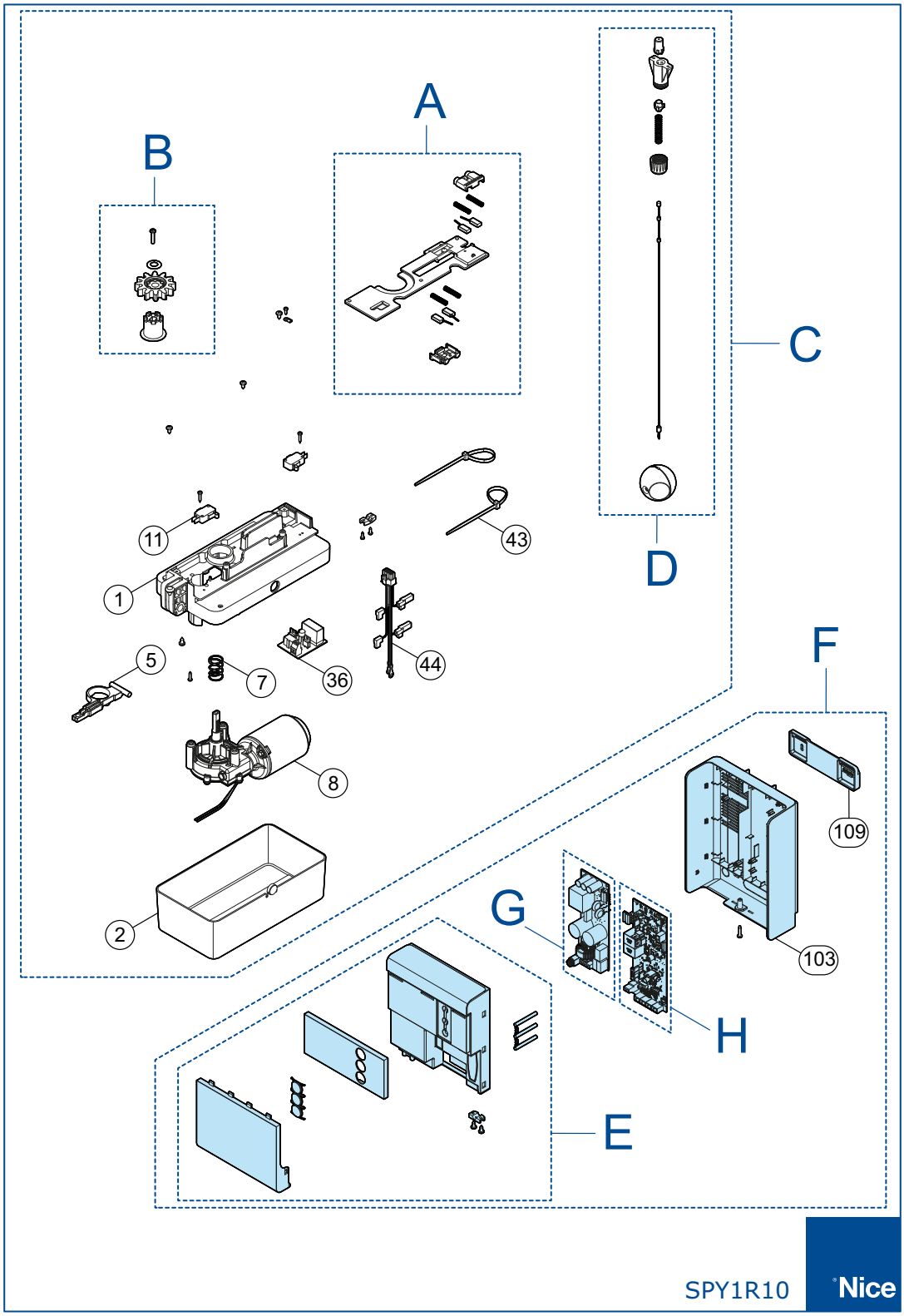

SPY1R10

Nice