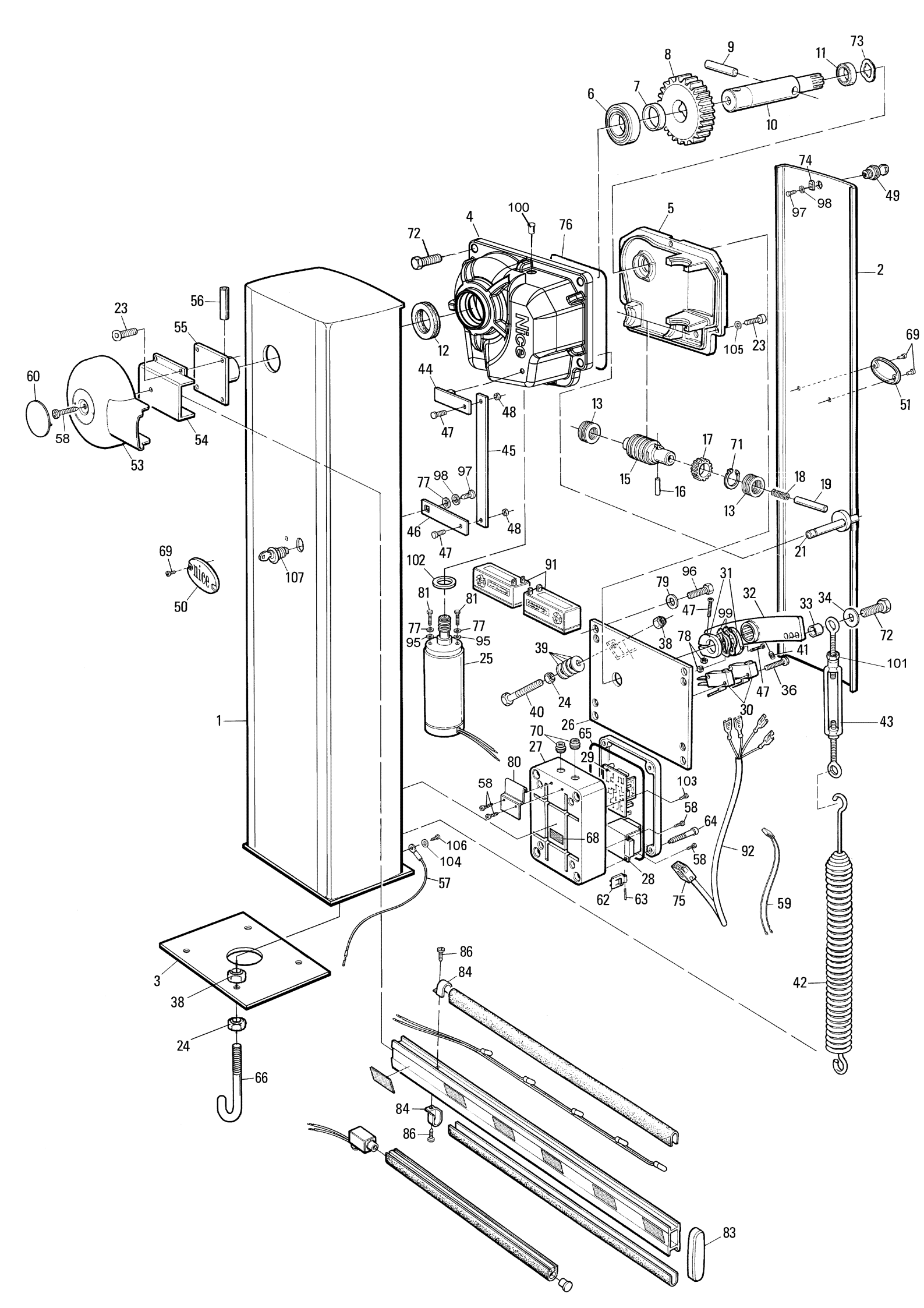
Nice
Nice