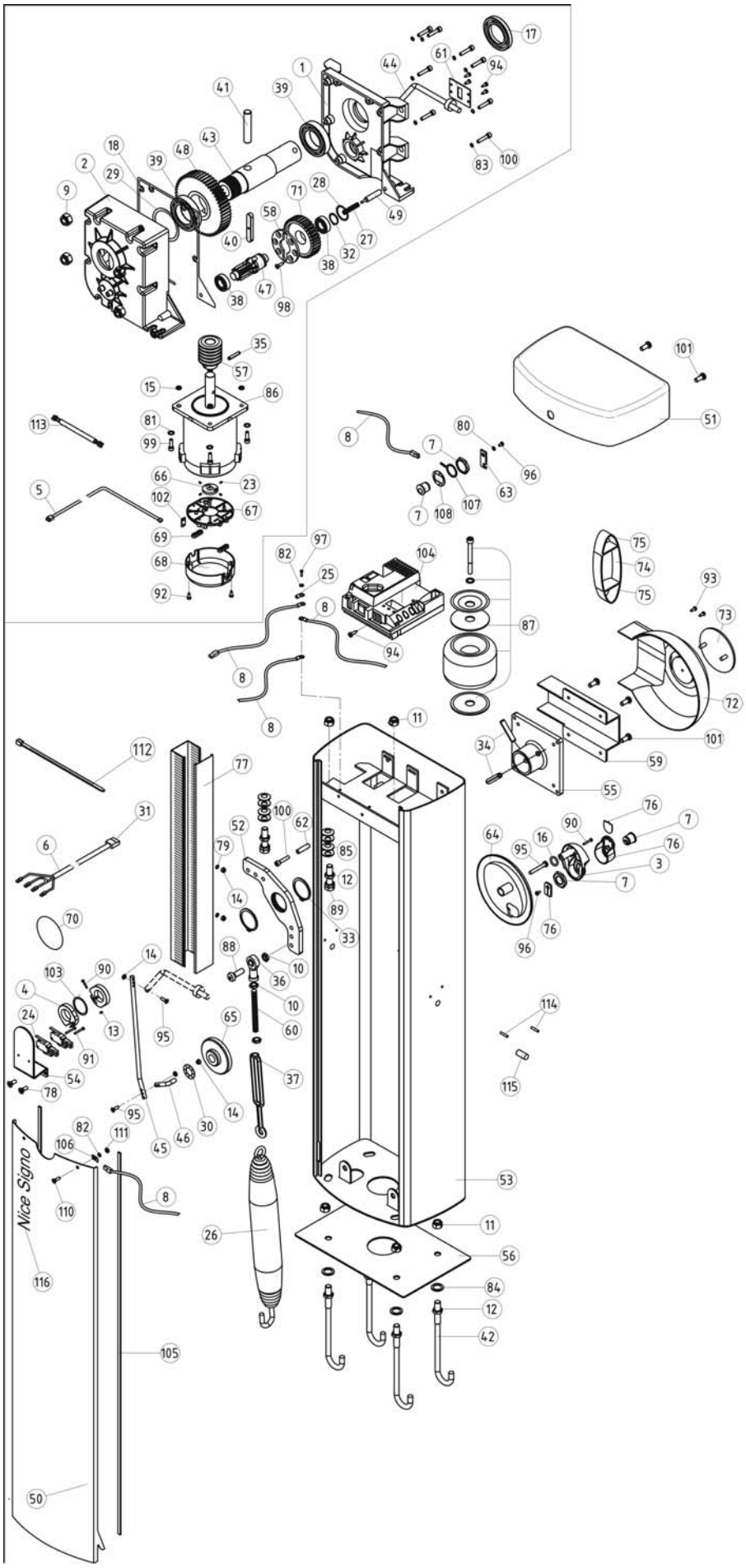
Nice Signo