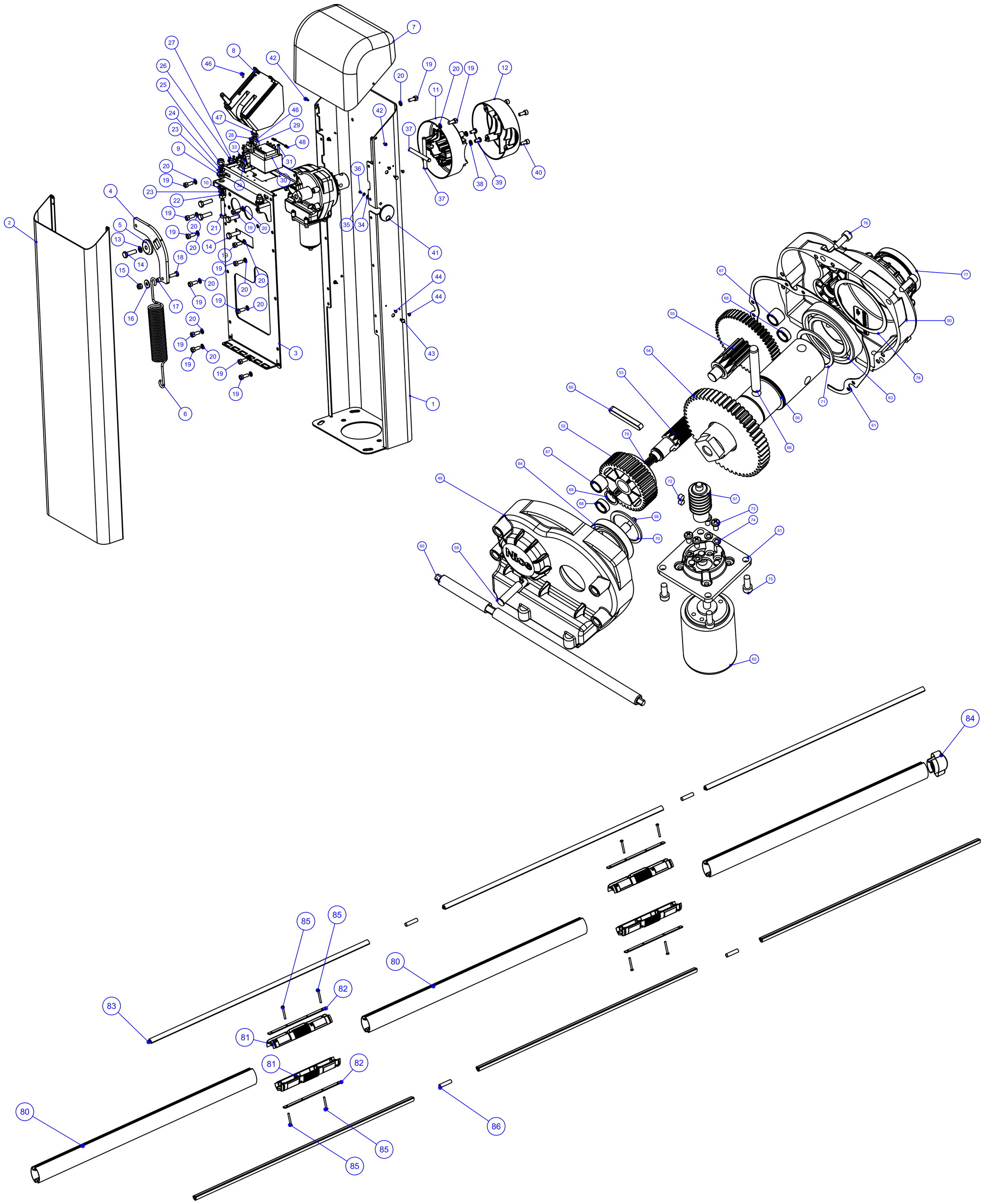
Nice