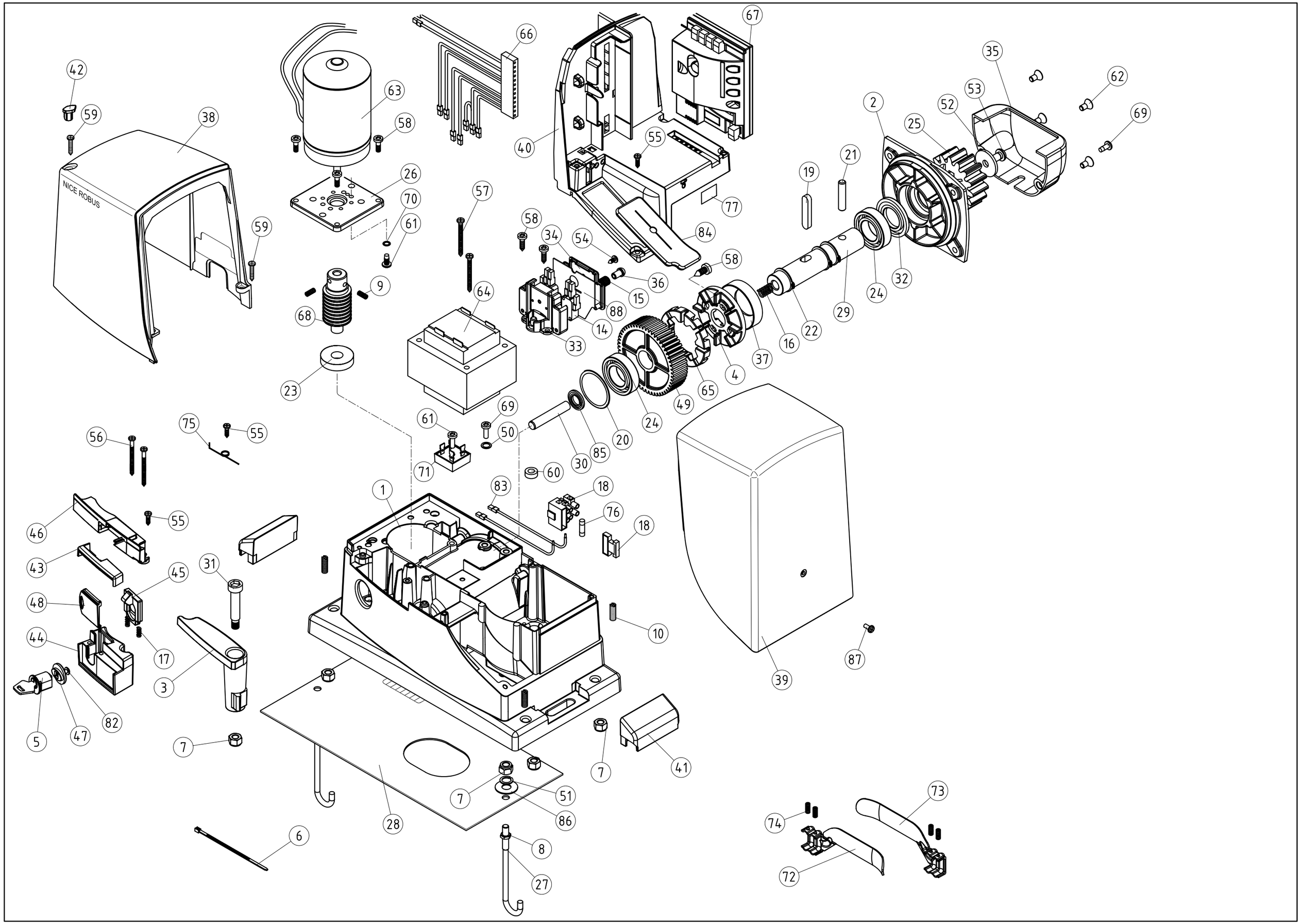
NICE ROBUS