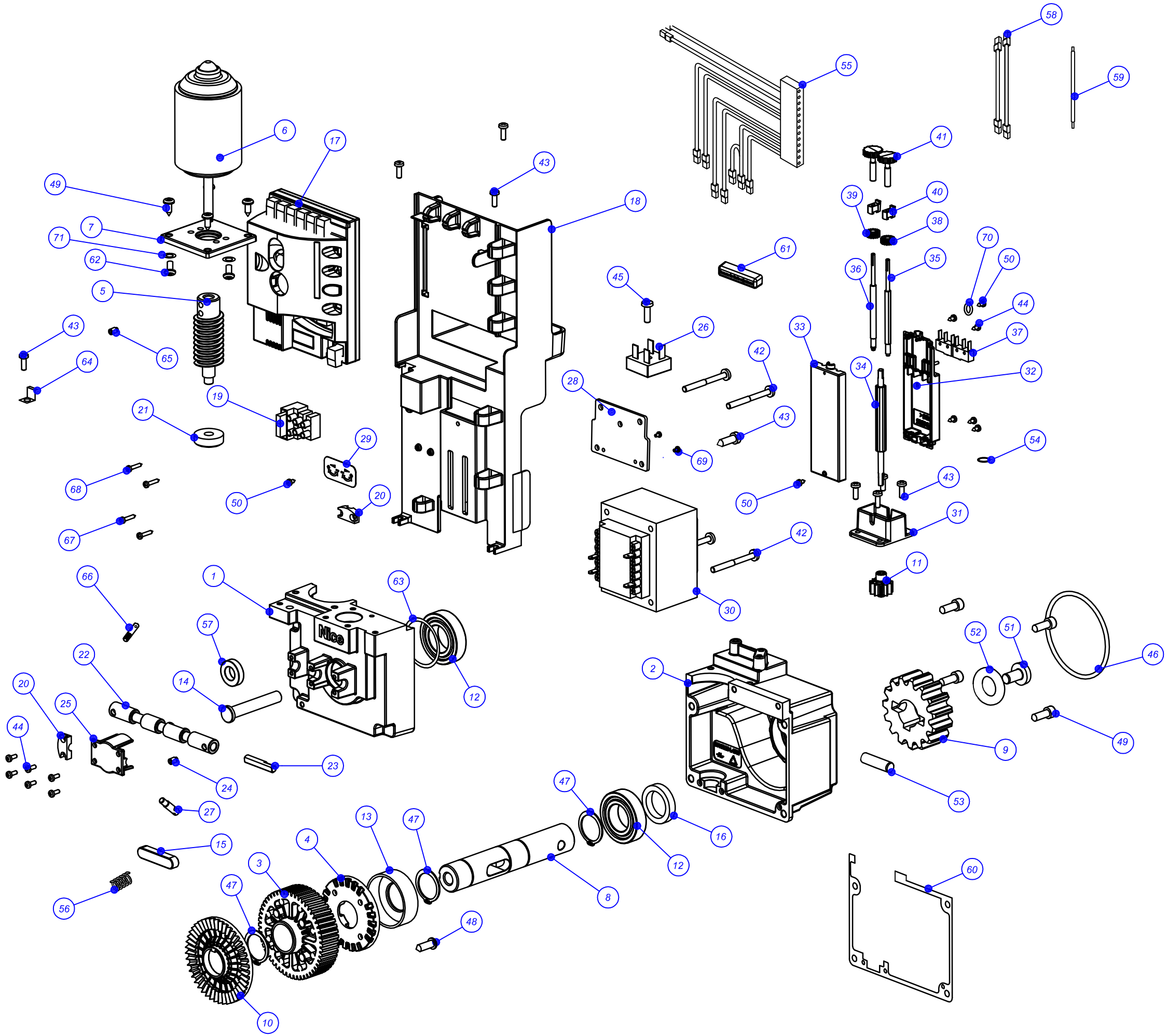

Nice